DYNACORD®

PRO MATRIX® SYSTEM

OWNER'S MANUAL

# DPA 4410 POWER AMPLIFIER

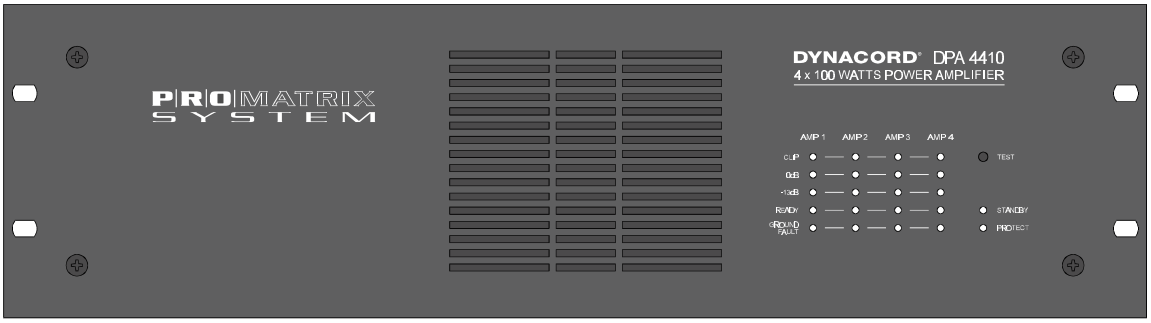


## Features

- 4 x 100 W output capacity
- off ground potential 100 V outputs (internally configurable to 70 V/50 V or 4 ohms)
- all outputs are protected against floating (no load) and short-circuit
- mains supply 115/230 V AC or battery operation 24 V DC
- mains switch 115/230 V
- REMOTE CONTROL start with STANDBY indicator (mains and battery operation)
- service mains switch
- GROUND-LIFT switch
- active ventilated through a temperature-controlled DC ventilator
- electronically balanced inputs
- routing switch for parallel operation of the amplifier inputs
- input level control
- power-on noise suppression
- 3 LED indicators with CLIPPING indicator for metering purposes
- MONITOR outputs
- temperature control with PROTECT indicator
- fault indicators: READY and GROUND FAULT
- fault message via off potential READY contact
- TEST switch for pilot tone surveillance and GROUND FAULT reset
- off ground potential, balanced input transformer are optionally available
- pilot tone surveillance module and ground fault surveillance module are optionally available
- 19" rack dimensions with 3 HU



Downloaded from www.Manualslib.com manuals search engine

# IMPORTANT SAFETY INSTRUCTIONS

CAUTION
RISK OF ELECTRIC SHOCK
DO NOT OPEN

WARNING: TO REDUCE THE RISK OF FIRE OR ELECTRIC SHOCK. DO NOT EXPOSE THIS APPLIANCE TO RAIN OR MOISTURE.
AVIS: RISQUÉ DE CHOC ELECTRIQUE. NE PAS OUVRIR.

The lightning flash with arrowhead symbol, within an equilateral triangle is intended to alert the user to the presence of uninsulated “dangerous voltage” within the product’s enclosure that may be of sufficient magnitude to constitute a risk of electric shock to persons.

The exclamation point within an equilateral triangle is intended to alert the user to the presence of important operating and maintance (servicing) instructions in the literature accompanying the appliance.

1. Read these instructions.
2. Keep these instructions.
3. Heed all warnings.
4. Follow all instructions.
5. Do not use this apparatus near water.
6. Clean only with a damp cloth.
7. Do not block any of the ventilation openings.
   Install in accordance with the manufactures instructions.
8. Do not install near any heat sources such as radiators, heat registers, stoves, or other apparatus that produce heat.
9. Only use attachments/accessoris specified by the manufacturer.
10. Refer all servicing to qualified service personnel. Servicing is required when the apparatus has been damaged in any way, such as power-supply cord or plug is damaged, liquid has been spilled or objects have fallen into the apparatus, the apparatus has been exposed to rain or moisture, does not operate normally, or has been dropped.

**For US and CANADA only:**

Do not defeat the safety purpose of the grounding-type plug. A grounding type plug has two blades and a third grounding prong. The wide blade or the third prong are provided for your safety. When the provided plug does not fit into your outlet, consult an electrican for replacement of the absolete outlet.

# IMPORTANT SERVICE INSTRUCTIONS

1. Security regulations as stated in the EN 60065 (VDE 0860 / IEC 65) and the CSA E65 - 94 have to be obeyed when servicing the appliance.
2. Use of a mains separator transformer is mandatory during maintenance while the appliance is opened, needs to be operated and is connected to the mains
3. Switch off the power before retrofitting any extensions, changing the mains voltage or the output voltage.
4. The minimum distance between parts carrying mains voltage and any accessible metal piece (metal enclosure), respectively between the mains poles has to be **3 mm** and needs to be minded at all times.
   The minimum distance between parts carrying mains voltage and any switches or breakers that are not connected to the mains (secondary parts) has to be **6 mm** and needs to be minded at all times.
5. Replacing special components that are marked in the circuit diagram using the security symbol (Note) is only permissible when using original parts.
6. Altering the circuitry without prior consent or advice is not legitimate.
7. Any work security regulations that are applicable at the location where the appliance is being serviced have to be strictly obeyed. This applies also to any regulations about the work place itself.
8. All instructions concerning the handling of **MOS** - circuits have to be observed.

**Note: SAFETY COMPONENT (HAS TO BE REPLACED WITH ORIGINAL PART ONLY)**



Downloaded from www.Manualslib.com manuals search engine

## INDICATORS, CONTROLS AND CONNECTIONS

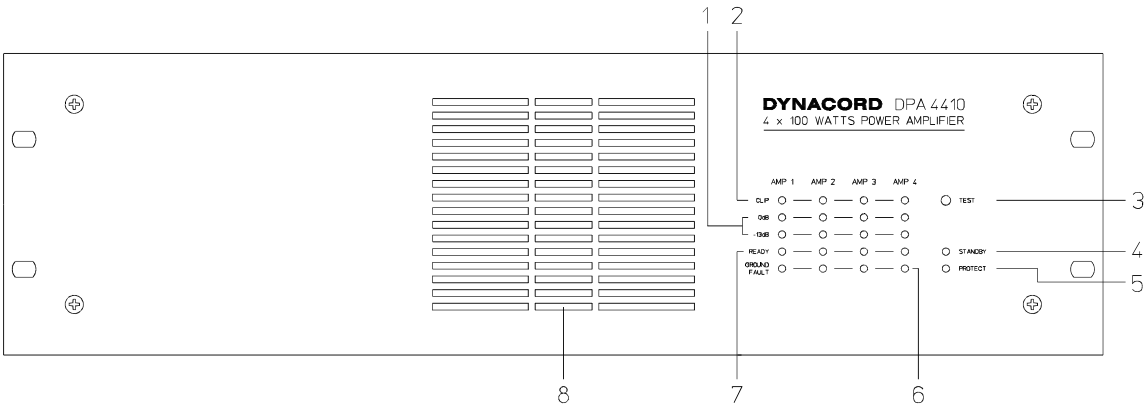


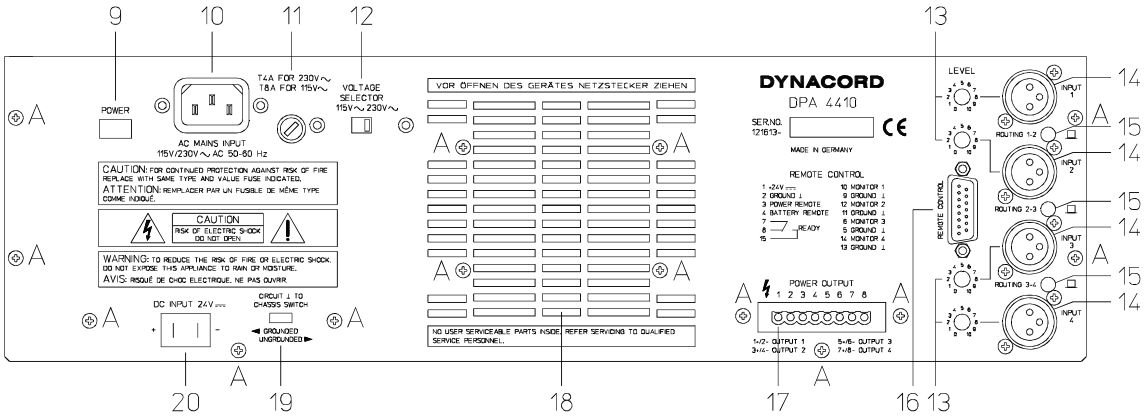


| | |
|---|---|
| 1 | LED meters |
| 2 | CLIP indicator |
| 3 | TEST button for checking and reset |
| 4 | STANDBY indicator |
| 5 | PROTECT indicator |
| 6 | GROUND FAULT indicator |
| 7 | READY indicator |
| 8 | air inlets |
| 9 | POWER on switch |
| 10 | AC MAINS INPUT connector |
| 11 | mains fuse |
| 12 | VOLTAGE SELECTOR switch |
| 13 | LEVEL 1- 4 input level controls |
| 14 | INPUT 1- 4 XLR-type connectors |
| 15 | INPUT 1- 4 routing switch |
| 16 | REMOTE CONTROL connector |
| 17 | POWER OUTPUT connector |
| 18 | air outlets |
| 19 | CIRCUIT TO CHASSIS switch |
| 20 | DC INPUT 24 V= |

A rear plate screws (see also paragraph 11)



Downloaded from www.Manualslib.com manuals search engine

## TABLE OF CONTENTS


FEATURES . . . . . 17
IMPORTANT SAFETY INSTRUCTIONS . . . . . 18
INDICATORS, CONTROLS AND CONNECTIONS . . . . . 19
1. GENERAL NOTES . . . . . 21
2. INSTALLATION NOTES . . . . . 21
3. PRECAUTIONS AND RECOMMENDATIONS. . . . . 21
4. INPUTS . . . . . 22
5. OUTPUTS . . . . . 22
5.1 POWER OUTPUT. . . . . 22
5.2 POWER OUTPUT with 100 V speaker systems . . . . . 23
5.3 POWER OUTPUT with low impedance speaker systems . . . . . 23
5.4 POWER OUTPUT 100 V with double output capacity . . . . . 24
5.5 MONITOR output . . . . . 24
5.6 REMOTE CONTROL connection . . . . . 24
6. METERING . . . . . 25
7. 24 V DC OPERATION . . . . . 25
8. SETTING THE OUTPUT VOLTAGE (only by qualified service personal) . . . . . 25
9. ADDITIONAL FUNCTIONS AND FEATURES . . . . . 26
9.1 NRS 90206 pilot tone surveillance. . . . . 26
9.2 NRS 90207 ground fault surveillance . . . . . 27
9.3 NRS 90208 input transformer . . . . . 27
10. INCORPORATION INTO 19" FLIGHTCASES OR 19" RACK SYSTEMS . . . . . 28
11. FUSES . . . . . 28
12. SPECIFICATIONS OF THE DPA 4410 . . . . . 30
13. SPECIFICATIONS OF THE OPTIONAL ACCESSORIES . . . . . 31
13.1 NRS 90206 pilot tone surveillance. . . . . 31
13.2 NRS 90207 ground fault surveillance . . . . . 31
13.3 NRS 90208 input transformer . . . . . 31
14. BLOCK DIAGRAM OF THE DPA 4410 . . . . . 48




Downloaded from www.Manualslib.com manuals search engine

## 1. GENERAL NOTES

The amplifier DPA 4410 has been specially designed to ensure durable performance and reliable operation of sound reinforcement systems with several independent speaker circuits. The DPA 4410 is best suited for call and message transmission installations, alert systems, and for general music applications in industrial enterprises, offices, multi-functional halls and sports arenas, schools, churches, hotels, hospitals, supermarkets, cruise ships, and other similar occasions.

## 2. INSTALLATION NOTES

When placing or mounting the amplifier, it is important that the air-flow can pass unhindered through the air inlets on the front and the air outlets on the rear of the appliance (see also paragraph 10).

**The amplifier has to be protected from:**

- dropping or splashing water
- direct sunlight
- high environmental temperatures or direct radiation of heat sources
- moisture
- dust
- shock or vibration

When moving the amplifier from a cold into a warm environment, condensation of its inner parts can sometimes occur. If so, the appliance can be operated again after gaining the environmental temperature (approximately after one hour).

If a solid object has fallen or liquid has leaked into the device, disconnect all connections and get in contact with an authorized DYNACORD service center. Do not operate the amplifier after such accidents.

When cleaning the amplifier's outside enclosure, never use any cleaning sprays or detergents, because of inflamability. The use of those liquids will damage the appliance.

## 3. PRECAUTIONS AND RECOMMENDATIONS

When the appliance is operated with the mains supply, use the included mains cable to connect the amplifier to a 230 V or 115 V 50/60 Hz wall outlet. Connect the cable's other end to the appliance's 3-pole machine-type socket (10).

**Warning** The amplifier is factory-set to 230 V AC. To change this setting use the voltage switch (12). For the operation with 115 V AC, the mains fuse (11) has to be exchanged by an 8 A slow-blow fuse with the label print "T8A" (see also paragraph 11).

When using the amplifier with a remote-start device, an external 24 V DC source has to be connected to the REMOTE CONTROL connector (16) (see also paragraph 5.6). If the connection was performed right and 24 V DC voltage is present, the STANDBY indicator (4) will light.

The POWER switch (9) on the rear of the amplifier for bridging the starting relay is meant only for service purposes. In that case the amplifier can be operated without the external 24 V DC supply.

**Note** The POWER switch (9) on the rear of the amplifier is meant only for service purposes. If this switch is engaged, the remote power-off function of the appliance is not operational and the STANDBY indicator provides no indication.

**The DPA 4410 is equipped with a cut-in delay of approximately 3 seconds to efficiently suppress power-on noise.**



Downloaded from www.Manualslib.com manuals search engine

## 4. INPUTS 1 - 4

The inputs 1 - 4 (14) are electronically balanced. With a sensitivity of 775 mV = 0 dB, they are meant for the connection of common control pre-amplifiers. In case off ground potential inputs are needed, the amplifier inputs are prepared to be retrofitted with input transformers of the type NRS 90208 (per input). Using the ROUTING switch (15) allows parallel operation of the inputs 1 - 4, providing the through connection of the input signal, when feeding the identical program to several power amplifiers. The correct input level can be set by using the level controls (13).

| | | |
|---|---|---|
| **Hinweis** | Visual determination of the ROUTING switches' required settings can be established by marking the corresponding symbols, located next to the switches, using a permanent maker. | ROUTING Switch<br>ON OFF |

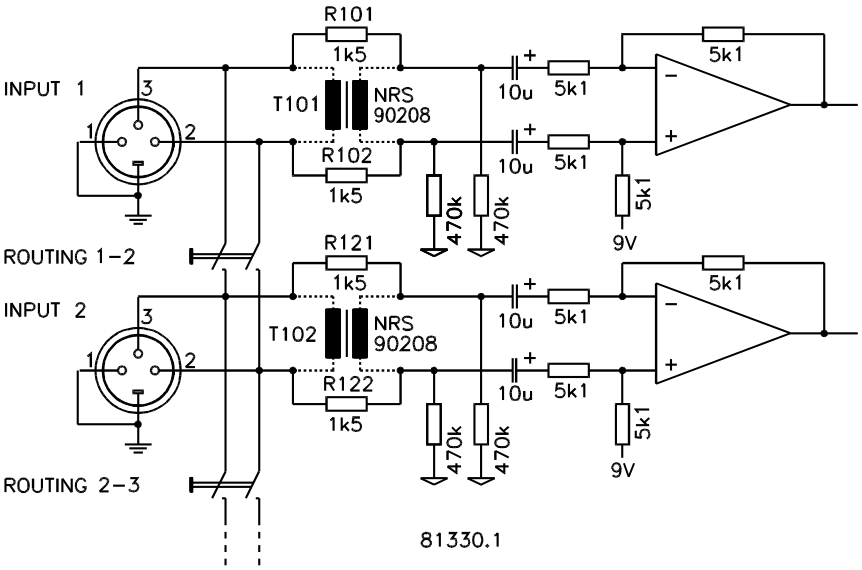


Diagram 1 Input connections

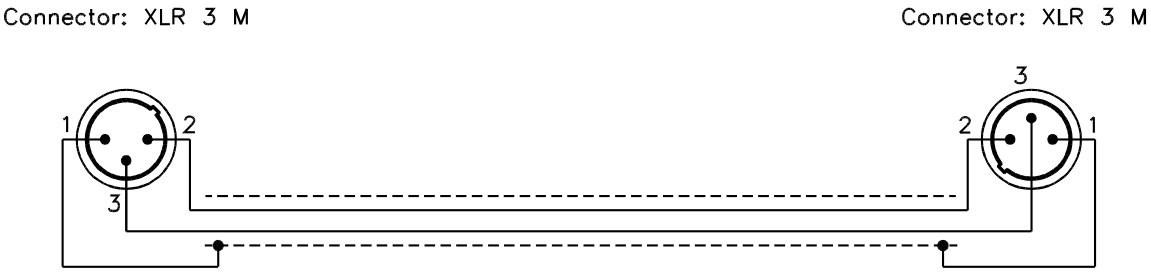


Diagram 2 NF cable for coupled operation of two DPA 4410

## 5. OUTPUTS

### 5.1 POWER OUTPUT

All power outputs are balanced and off ground potential. The outputs are presetted by DYNACORD for the connection of 100 V speaker systems. The connection is achieved through plugging the 8-pole socket into the connection strip (17). Using the output transformer switch, the output voltage can be changed to 70 V, 50 V and 20 V (see also paragraph 8). In the 20 V position, the operation of low impedance speakers with a load of 4 ohms is possible.



Downloaded from www.Manualslib.com manuals search engine

## 5.2 POWER OUTPUT with 100 V speaker systems

The use of speaker systems with a 100 V matching transformer is recommended to reduce the lack in performance when the distance between amplifier and speaker systems exceeds 50 m. This method also offers an easy way of output power distribution. The total power consumption of the maximum amount of the connected speaker network has to match the amplifier's overall output capacity of 100 W (with an impedance of 100 ohms). The connection is performed via the 100 V output (17) (see also diagram 3).

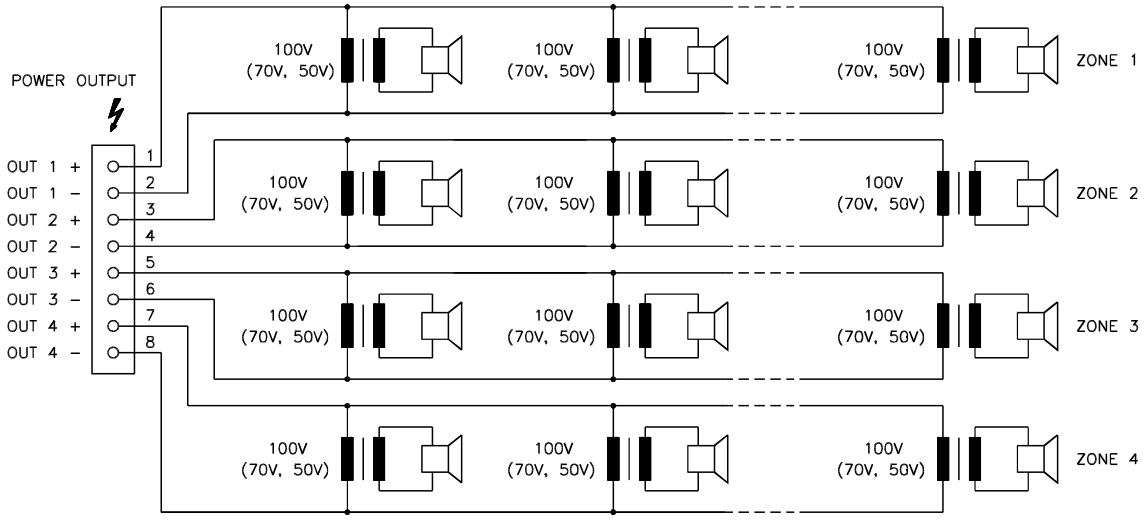


Diagram 3 Connecting 100 V (70 V or 50 V) speakers

## 5.3 POWER OUTPUT with low impedance speaker systems

After switching the output to 20 V, low impedance speaker systems (4 - 16 ohms) can be connected to the corresponding output (see also diagram 4). Because of an occurring drop in the overall performance, the distance between amplifier and speaker systems should not exceed 50 m. It is of further importance that the overall impedance of the speakers does not decline 4 ohms and that the individual power handling capacity of each speaker is not exceeded.

Free combination of the DPA 4410's power output voltages, including mixed 100 V and low impedance (4 ohms) operation, is possible.

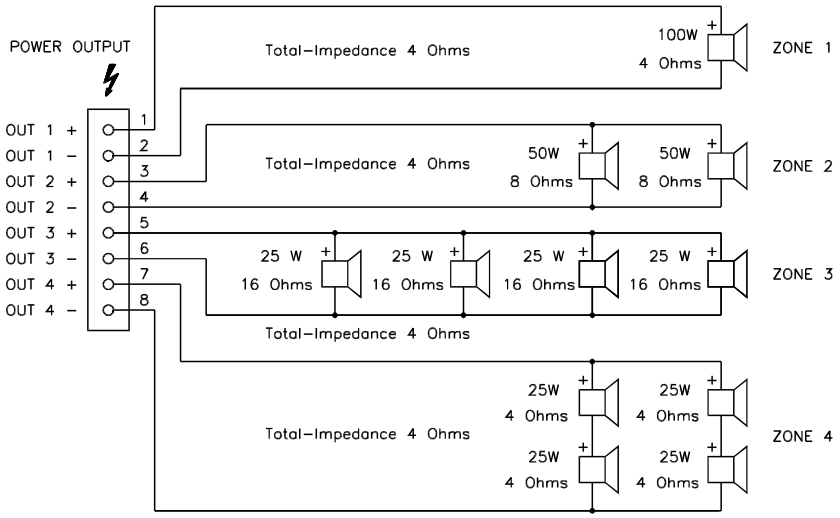


Diagram 4 Connecting low impedance speakers



Downloaded from www.Manualslib.com manuals search engine

### 5.4 POWER OUTPUT 100 V with double output capacity

If the output power of one output is not sufficient to feed all cabinets that are incorporated within a speaker network and it is not possible to divide the speaker chain, doubling the output power can be achieved by coupling the outputs of two DPA 4410. In that case the amplifier inputs are paralleled and the outputs are connected in series (see also diagram 5).

Coupling is possible under the following restrictions: only identical amplifiers can be connected. Since doubling the output voltage comes along with the serial connection, it is necessary to switch the outputs of both amplifiers to 50 V (see also paragraph 8), resulting again in 100 V overall output voltage. In this case the speaker chain's minimum load impedance is 50 ohms. The LEVEL controls (13) of the two DPA 4410 have to be set fully to the right.

This procedure results in the following output combinations:
**4 x 100 W or 2 x 100 W + 1 x 200 W or 2 x 200 W**

For information about the input connection, please refer to paragraph 4 of this manual. For the connection of the speaker network, please refer to the diagram below.

**Attention** During the operation the pins of the POWER OUTPUT strip may conduct dangerous voltage (> 34 V in peaks). Therefore, the connected speaker networks have to be installed in accordance to applicable security regulations (see also paragraph 9.2).

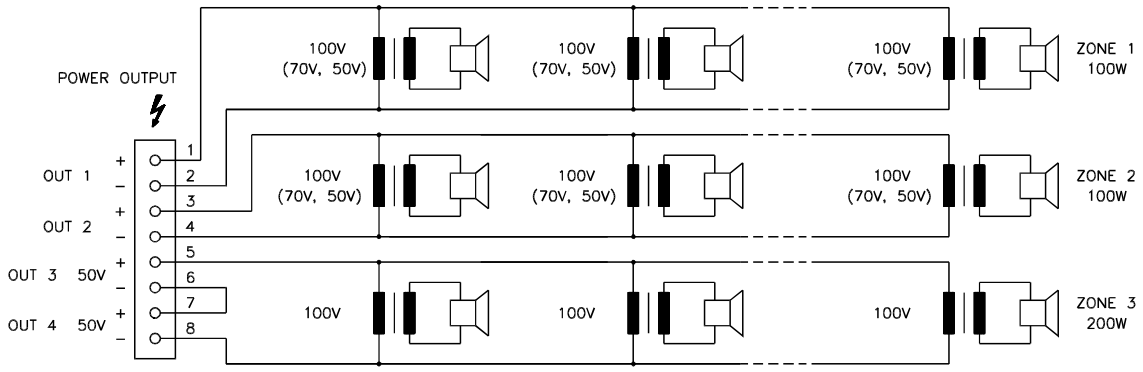


Diagram 5 Connecting 100 V speakers with a power increase to 200 V

### 5.5 MONITOR output

The MONITOR outputs (16) provide an unbalanced, low-impedance signal and are meant for the connection of monitoring amplifiers. Since the outputs are of low impedance, the cable length of the connected speaker systems may be up to 200 m. Connection is performed via the REMOTE CONTROL D-Sub connector (see also diagram 6).

### 5.6 REMOTE CONTROL connection

The following control IN/OUTs are provided through the 15-pole D-Sub REMOTE CONTROL connector (16):

| | |
|---|---|
| - 24 V standby voltage | - negative pole grounded |
| - POWER REMOTE start | - closing contact over ground |
| - BATTERY REMOTE start | - closing contact over ground |
| - MONITOR output | - single-sided grounding |
| - READY message | - off potential contact |



Downloaded from www.Manualslib.com manuals search engine

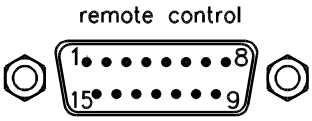


| | | | |
|---|---|---|---|
| 1 | +24V = Standby | 11 | ⊥ monitor ground |
| 2 | ⊥ Standby ground | 12 | monitor 2 |
| 3 | power remote | 13 | ⊥ monitor ground |
| 4 | battery remote | 14 | monitor 4 |
| 5 | ⊥ monitor ground | 7 | |
| 6 | monitor 3 | 8 | ready |
| 9 | ⊥ monitor ground | 15 | |
| 10 | monitor 1 | | |

Diagram 6 Pin-assignment of the REMOTE CONTROL D-Sub connector

## 6. METERING

The green LED indicator (1) permits the continuous monitoring of the output level, providing the possibility to prevent the speaker systems from overload situations and damaging. When during program peaks the red CLIP LED (2) lights briefly, the maximum distortion-free output is gained. Whenever the CLIP LED (2) is continuously lit, the amplifier is driven into overdrive and the input level should be reduced.

## 7. 24 V DC OPERATION

The DPA 4410 can be operated on the mains power supply or fed by an external 24 V battery.

Switching to battery operation is performed through an internal relay.

The battery is connected to the socket on the rear of the appliance (20), using insulated AMP flat connectors 6.3 x 0.8 mm. The amplifier is protected against the confusion of poles. Additional internal protection is provided by two 25 A miniature fuses, located on the printed board assembly 85264 (see also diagram 10).

The battery cable's cross section should be at least 2.5 $mm^2$ and the length of the cable should not exceed 4.0 m (max. drop in voltage <1 V).

**Attention**. The DPA 4410 can only be operated using batteries without grounding or batteries with grounding of the negative pole. Operation with batteries with grounding of the positive pole is not possible.

## 8. SETTING THE OUTPUT VOLTAGE (only by qualified service personal)

The DPA 4410 provides output voltages of either 20 V, 50 V, 70 V, or 100 V. The output voltage is preset to 100 V. Changing the output voltage to a value of 20 V, 50 V, or 70 V should only be carried out by authorized DYNACORD service personal.

**Attention** During the operation the pins of the POWER OUTPUT strip may conduct dangerous voltage (> 34 V in peaks). Therefore, the connected speaker networks have to be installed in accordance to applicable security regulations (see also paragraph 9.2).

- To open the appliance remove the top plate.
- The four output transformers 354030 are located on the left-hand side of the appliance. They are numbered 1, 2, 3, and 4; starting from the rear cover plate of the appliance.
- Before switching an output, the corresponding transformer has to be removed. This is done by detaching the screws on the bottom plate of the appliance.
- For changing the output voltage (see also diagram 7), the orange wire on the transformer attached to the soldering tab 13 (100 V) has to be unsoldered and soldered instead to the required soldering tab (70 V, 50 V, or 20 V).
- The output transformer as well as the screws on the bottom plate have to be replaced at the same spot.
- The top cover plate of the appliance has to be replaced.



Downloaded from www.Manualslib.com manuals search engine

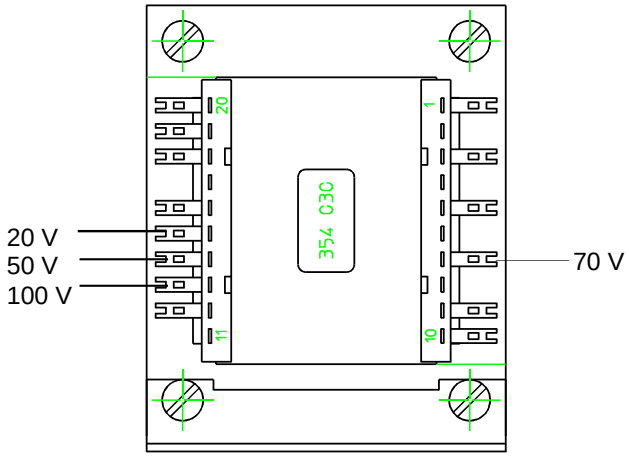


Diagram 7  Changing the output transformer's 354030 output voltage

## 9. ADDITIONAL FUNCTIONS AND FEATURES

### 9.1 NRS 90206 pilot tone surveillance

Using the extension kit NRS 90206, the amplifier channels are automatically and continuously monitored. This is achieved by sending an ultra low-level 19 kHz pilot tone through the device. It enters the signal path after the LEVEL controls, runs through the amplification stages and gets filtered out and evaluated at the output. In case the result of this evaluation shows that the pilot dropped beneath a defined threshold or is missing at all, the corresponding READY indicator AMP 1 - 4 (7) goes out and the READY fault relay is reset. The fault message appears as collective fault message at the READY relay's off-potential contact on the REMOTE CONTROL D-Sub connector (16).

The extension kit NRS 90206 comes as a plug-in board assembly. It is equipped with a 19 kHz oscillator and four selective 19 kHz receivers with evaluation stages.

Installation of the NRS 90206 (see also diagram 8):

- Follow the descriptions given in paragraph 8 to open the appliance
- Be sure to first insert the included board-guides before installing the printed circuit board, assuring the correct position of their guide grooves. The release lever of the guides marked as "A" points to the top, while the one of the guides marked as "B" points down.
- The printed board assembly has to be inserted into the guides with its printed side pointing to the top, until it firmly locks in place.
- Reassemble the appliance following the descriptions under paragraph 8.

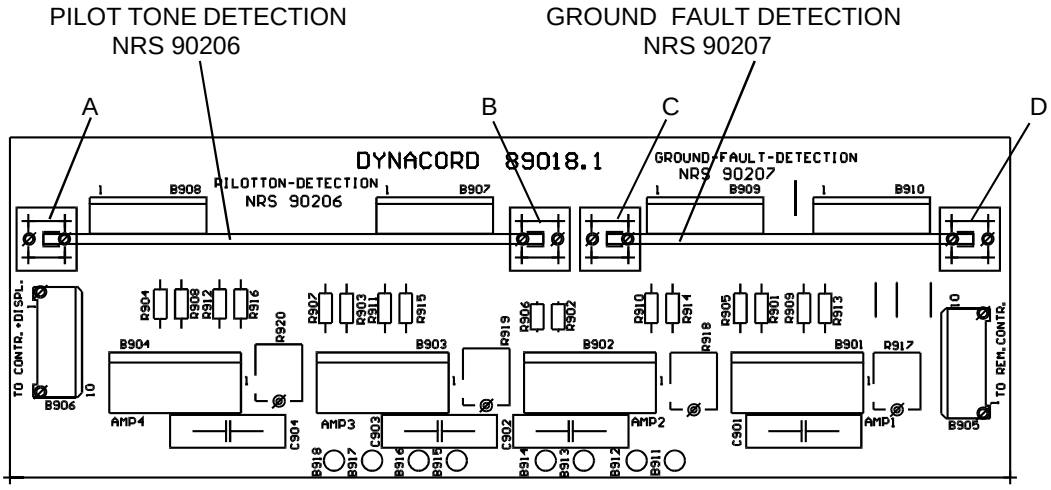


Diagram 8  Printed circuit board 89018.1
with the inserted modules NRS 90206 and NRS 90207



Downloaded from www.Manualslib.com manuals search engine

Checking the functioning:

With built-in NRS 90206 and operational amplifier, the READY indicators (7) have to be lit. Use the TEST button (3) to check and reset the pilot function. When keeping the TEST button pressed, the 19 kHz oscillator is switched off, the READY indicators go out, and the READY fault relay is being reset. After approximately 3 seconds, when the TEST button is released, the READY indicators will light again.

### 9.2 NRS 90207 ground fault surveillance

The VDE regulation DIN VDE 0800 has to be obeyed when planning and afterwards operating 100 V sound reinforcement systems. Especially 100 V alert systems have to be in accordance with all protection measures for class 3 appliances.

Therefore, we recommend for off-ground potential speaker network installations the use of the ground fault surveill ance module NRS 90207 for automated surveillance of the network insulation. Error registration: A ground fault message signals that a damaged cable has been detected – possibly resulting in an upcoming cable interruption – or a wrongly connected cable, possibly resulting in malfunctioning. Whenever the DPA 4410 is operational or connected to an intact battery, the message “Ground Fault” is given out even with short-time ground fault occurrences (>5 sec). The ground fault message appears as collective fault message at the READY relay’s off-potential contact on the REMOTE CONTROL D-Sub connector (16).

The extension kit NRS 90207 comes as a plug-in printed board assembly, providing monitoring circuitry with error-storage and display driver for four 100 V outputs.

Installation of the NRS 90207 (see also diagram 8):

- Follow the descriptions given in paragraph 8 to open the appliance.
- Be sure to first insert the included board-guides before installing the printed circuit board, assuring the correct position of their guide grooves. The release lever of the guides marked as “C” points to the top, while the one of the guides marked as “D” points down.
- The printed circuit board has to be inserted into the guides with its printed side pointing to the top, until it firmly locks in place.
- Reassemble the appliance following the descriptions under paragraph 8.

Checking the functioning:

With built-in NRS 90207 and operational amplifier, the READY indicators (7) have to be lit. When using an external switch to shortcut one pole of the 100 V speaker network via a 47 kohms resistor and the ground conductor, the GROUND FAULT indicator (6) has to light and the READY fault relay has to reset. After releasing the button, the messages has to stay present. Use the TEST button (3) to reset the ground fault surveillance function.

### 9.3 NRS 90208 input transformer

The DPA 4410 is prepared for the installation of the optional input transformer NRS 90208. In case off-ground potential inputs are needed, one NRS 90208 has to be installed per input channel.

Installation of the NRS 90208 (see also diagram 8):

- Follow the descriptions given in paragraph 8 to open the appliance.
- Follow the descriptions given in paragraph 11 (exchange of the fuses F502 and F503) to detach the rear cover plate.
- Detaching the input printed circuit board 81330.1:
  first disconnect the four flat cables and then detach the screws of the input sockets.
- Before inserting the input transformer make sure to unsolder the resistors for: T101 : R101/R102, for T102 : R121/R122, for T103 : R141/R142, and for T104 : R161/R162.
- Attach the input transformer onto the printed circuit board, so that the markings on both parts are alligned.
- For the re-installation of the printed circuit board follow the same steps as mentioned above; just in the opposite order.
- To attach the rear cover plate follow the descriptions given in paragraph 11.
- Close the appliance in accordance with the descriptions in paragraph 8.



Downloaded from www.Manualslib.com manuals search engine

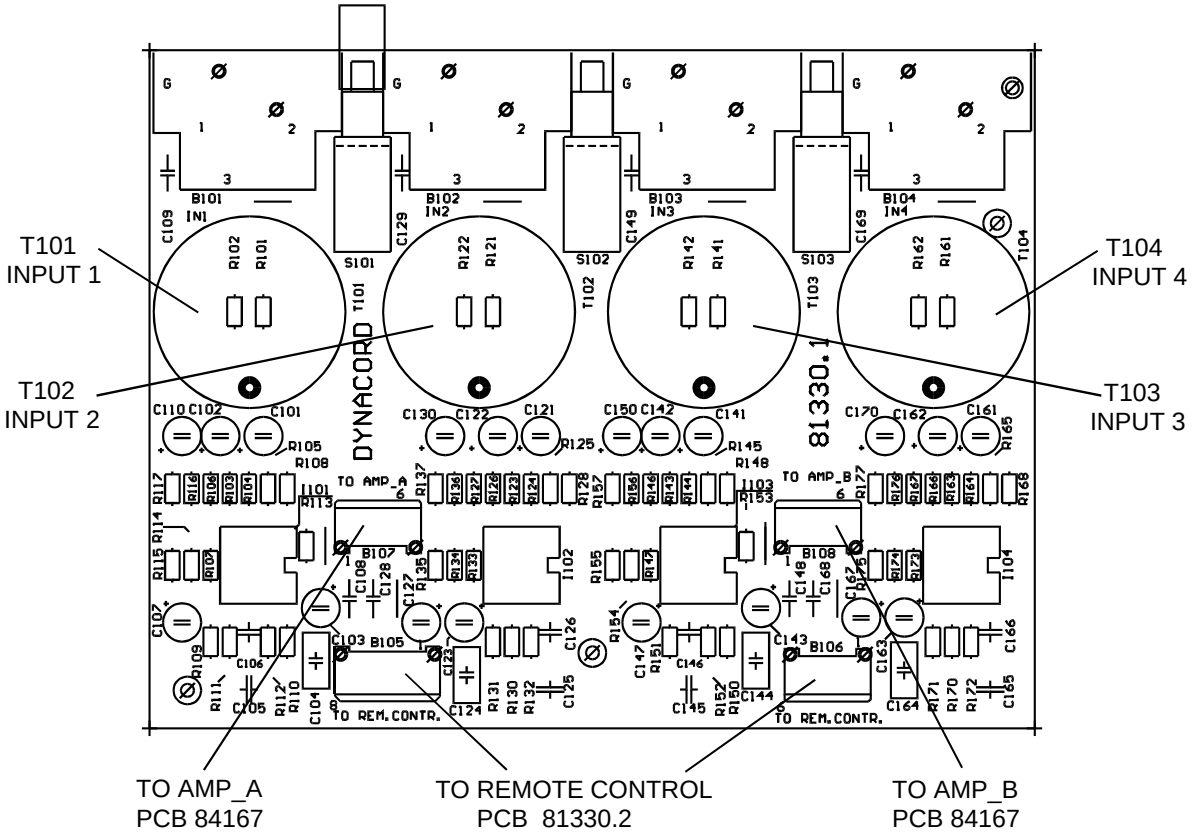


Diagram 9 Printed circuit board 81330.1 with inserted input transformers NRS90208

## 10. INCORPORATION INTO 19" FLIGHTCASES OR 19" RACK SYSTEMS

| | |
|---|---|
| **Note** | Do not operate the DPA 4410 without its enclosure or without parts of the enclosure. |

When incorporating the DPA 4410 into a 19" flightcase or 19" rack system make sure, that there is sufficient air-flow. Between the amplifier's rear plate and the back-wall of the surrounding enclosure there has to be at least a space of 60 mm x 330 mm up to the enclosures ventilation gaps. Above the rack system should be at least a space of 100 mm for a sufficient circulation of the air. During the operation of the DPA 4410 the environmental temperature within the rack closet may increase by about 10° C. This has to be taken into consideration when installing other equipment into the same rack system or other enclosures.

| | |
|---|---|
| **Note** | For trouble-free operation of the appliance, the maximum environmental temperature should not exceed +40° C. |

## 11. FUSES

| location | pos. | used for | value | dimensions | standard |
|---|---|---|---|---|---|
| fuse switch (11) | F501 | mains fuse 230V~ AC | T4A 250V | 5 x 20 mm | IEC 127 |
| fuse switch (11) | F501 | mains fuse 115V~ AC | T8A 250V | 5 x 20 mm | IEC 127 |
| PCB 85264.2 | F502 | battery fuse 24V DC | 25A 32V | flat-type fuse | DIN 72581-3 |
| PCB 85264.2 | F503 | battery fuse 24V DC | 25A 32V | flat-type fuse | DIN 72581-3 |
| PCB 85264.2 | F504 | power-AMP 1 | T6.3A 250V | 5 x 20 mm | IEC 127 |
| PCB 85264.2 | F505 | power-AMP 2 | T6.3A 250V | 5 x 20 mm | IEC 127 |
| PCB 85264.2 | F506 | power-AMP 3 | T6.3A 250V | 5 x 20 mm | IEC 127 |
| PCB 85264.2 | F507 | power-AMP 4 | T6.3A 250V | 5 x 20 mm | IEC 127 |



Downloaded from www.Manualslib.com manuals search engine

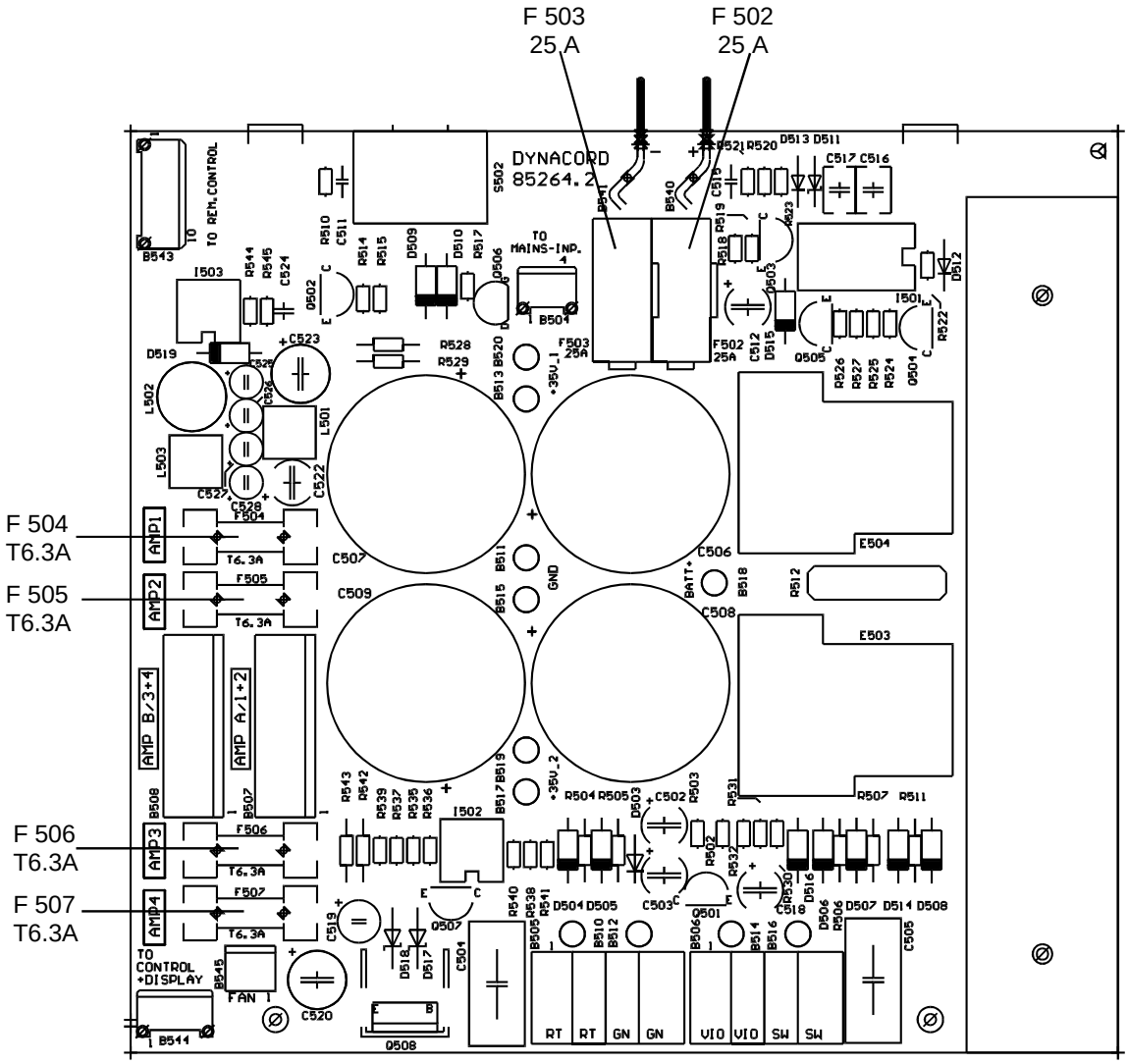


Diagram 10 printed circuit board 85264.2
with inserted DC fuses F502 and F507

Changing the fuses F502 and F503:

The battery fuses F 502 and F503 are located on the printed circuit board 85264.2, behind the AMP battery connections. In case they need to be exchanged, the top cover plate (see also paragraph 8) and the rear cover plate of the appliance have to be detached. Unlock the screws marked as “A” (see also the diagram on page 2, picturing the rear cover plate). The 4-pole flat cable between the two relays that is connected to the male multi-point connector B502 on the printed circuit board has to be disconnected. Now, the hinged rear plate can be turned up and taken out. Be careful not to damage any printed circuit board or the wiring. The fuses F502 and F503 are now easy to get to (see also diagram 10). Follow the same procedure in the opposite order to reattach the rear cover plate. After tightening the screws of the rear plate, the 4-pole flat cable has to be reconnected to the male multi-point connector B502. The top cover plate has to be reattached.



Downloaded from www.Manualslib.com manuals search engine

## 12. SPECIFICATIONS OF THE DPA 4410

Mains supply:

| | |
|---|---|
| Voltage: | 115 V / 230 V~ AC, ±10 |
| Frequency: | 50 - 60 |
| Protection class: | I |

| mains supply | Umains [V] | Imains [A] | Pmains [VA] | Pmains [W] | Pout [W] | Pv [W] |
|---|---|---|---|---|---|---|
| floating | 230 | 0.27 | 62 | 35 | 0 | 35 |
| normal operation (-10 dB) | 230 | 1.64 | 377 | 275 | 40 | 235 |
| alert (-3 dB) | 230 | 3.25 | 748 | 585 | 200 | 385 |
| normal operation | 230 | 4.39 | 1010 | 815 | 400 | 415 |
| starting current | < 36 A | | | | | |

| mains supply | Umains [V] | Imains [A] | Pmains [VA] | Pmains [W] | Pout [W] | Pv [W] |
|---|---|---|---|---|---|---|
| floating | 115 | 0.54 | 62 | 35 | 0 | 35 |
| normal operation (-10 dB) | 115 | 3.28 | 377 | 275 | 40 | 235 |
| alert (-3 dB) | 115 | 6.50 | 748 | 585 | 200 | 385 |
| normal operation | 115 | 8.78 | 1010 | 815 | 400 | 415 |
| starting current | < 20 A | | | | | |

Pmains [VA]=apparent power Umains*Imains, Pmains [W]=true power, Pout [W]=output power Pv [W]=leakage power

Battery supply:

| | |
|---|---|
| Voltage: | 24 V DC, -10/+30 % |

| battery supply | $U_B$ [V] | $I_B$ [A] | $P_i$ [W] | $P_{out}$ [W] | Pv [W] |
|---|---|---|---|---|---|
| floating | 24 | 1.0 | 24 | 0 | 24 |
| normal operation (-10 dB) | 24 | 7.5 | 180 | 40 | 140 |
| normal operation | 24 | 18 | 432 | 250 | 182 |
| starting current | < 3.9 A | | | | |

Pi [W]=input power UB*IB, Pout [W]=output power, Pv [W]=leakage power

| | |
|---|---|
| Input characteristics: | electronically balanced |
| Nominal input level | 775 mV = 0 dBu / 10 kohms |
| Power output characteristics: | balanced, off ground potential |
| Nominal output power | |
| with mains supply | 4 x 100 W ( IEC 268-3) |
| Nominal output voltage | |
| with mains supply | 100 V (70 V / 50 V / 20 V) |
| Nominal load impedance | 100 ohms (50 / 25 / 4 ohms) |

minimal total impedance

| 100 W Output capacity | | 200 W Output capacity | |
|---|---|---|---|
| 100 V Output | 100 Ohm / 250 nF | 50 V + 50 V Output | 50 Ohm / 500 nF |
| 70 V Output | 50 Ohm / 500 nF | ——— | ——— |
| 50 V Output | 25 Ohm / 1000 nF | ——— | ——— |
| 20 V Output | 4 Ohm/ 6250 nF | ——— | ——— |

| | |
|---|---|
| Noise voltage (A-weighted) | ≤ -56 dBu |
| THD at PA nominal | ≤ 1 % |
| Overall frequency response | 60 Hz … 20 kHz |
| Distortion-limited response | |
| (PA nominal -3 dB, k∑ = 1 %) | 60 Hz … 5 kHz |
| Crosstalk between two channels | ≥ 80 dB at 1 kHz / ≥ 60 dB at 10 kHz |



Downloaded from www.Manualslib.com manuals search engine

| | |
|---|---|
| Monitor output characteristics: | unbalanced |
| Nominal output voltage | 2 V = +8.2 dBu |
| Nominal load impedance | 600 ohms |
| Overall frequency response | 60 Hz … 20 kHz |
| Environmental temperature | +5° C … +40° C |
| Technical regulations:<br>This appliance is in accordance<br>with the following regulations: | EN 50081-1, EN 50082-1, EN 60065 |
| Dimensions (W x H x D) | 19" (483 mm) x 3 HU (132 mm) x 345 mm |
| installation depth<br>without external connectors | 340 mm |
| installation depth<br>with external connectors | max. 400 mm |
| Weight | 22.3 kg |
| Colour | anthracite |

**Optional accessories for the DPA 4410:**

NRS 90206 pilot tone surveillance module (for four outputs)
NRS 90207 ground fault surveillance module (for four outputs)
NRS 90208 balanced input transformer module (for one input)

## 13. SPECIFICATIONS OF THE OPTIONAL ACCESSORIES

### 13.1 NRS 90206 pilot tone surveillance module (for four outputs)

| | |
|---|---|
| Pilot tone frequency | 19 kHz ±1 % |
| Error detection threshold | ≤ 12 mV |
| Error message output | collective fault message with READY relay |

### 13.2 NRS 90207 ground fault surveillance module (for four outputs)

| | |
|---|---|
| Input | speaker line 20 V / 50 V / 70 V / 100 V |
| Error message output | collective fault message with READY relay |
| Disruptive strength | 1000 Veff |
| Error detection threshold | ≤ 50 kohms |

### 13.3 NRS 90208 balanced input transformer module (for one input)

| | |
|---|---|
| Response | 20 Hz … 20 kHz |
| Input impedance | ≥ 10 kohms |
| Floating transformation ratio | 1:1 |
| Primary winding resistance | 1420 ohms at 20° C |
| Secondary winding resistance | 1420 ohms at 20° C |



Downloaded from www.Manualslib.com manuals search engine