ERGO fount
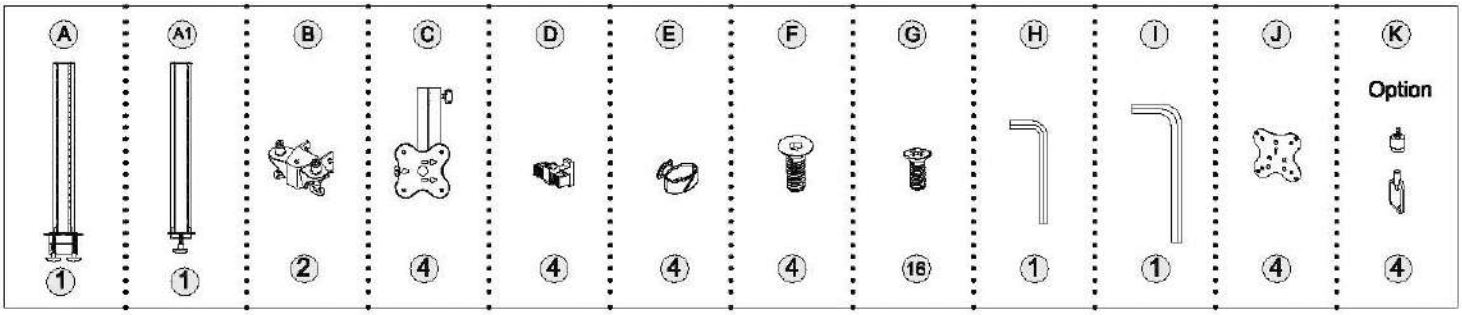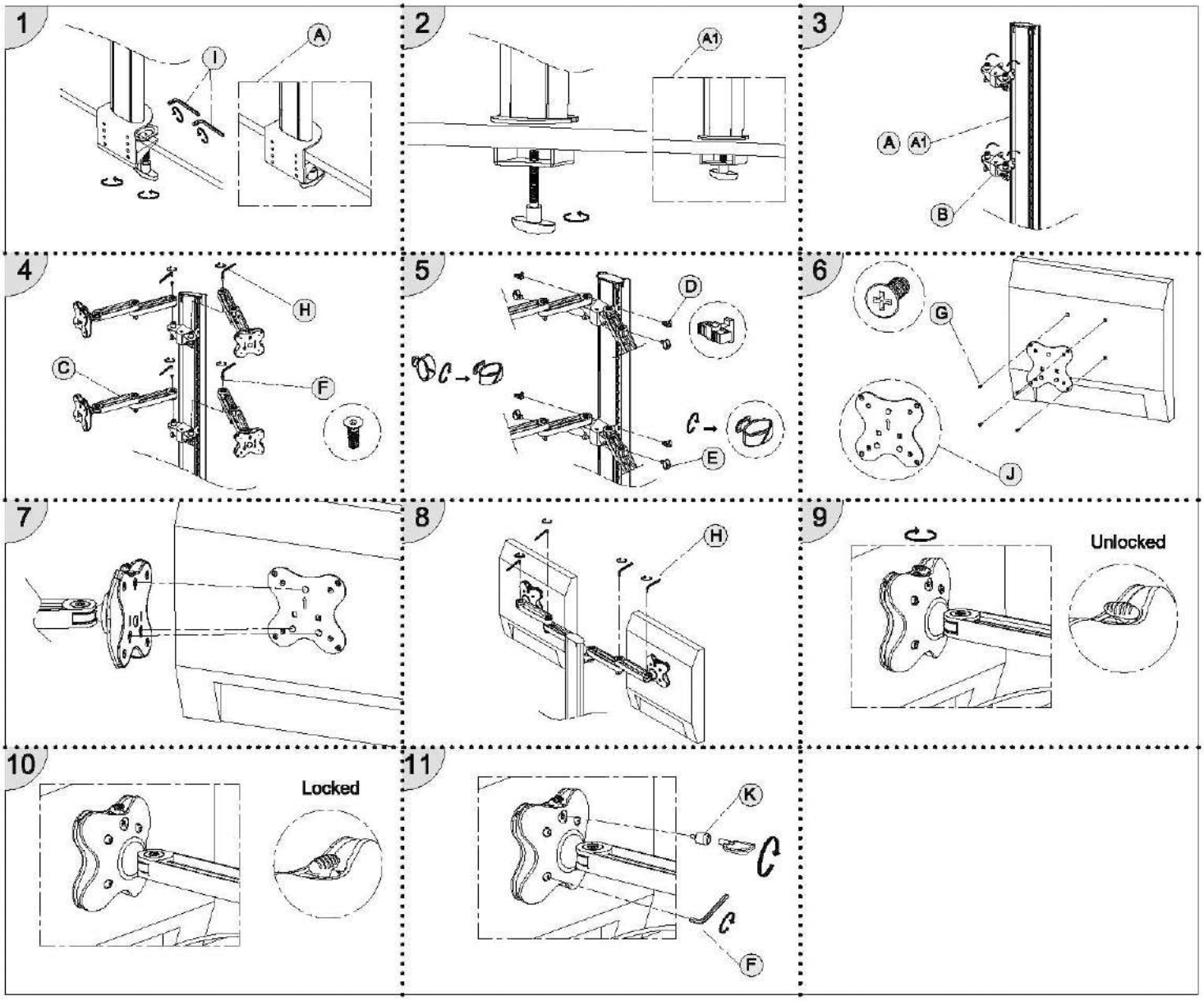
BTFS-402C/BTFS-402G